Cedar Pot Sleeve

24 in × 12 in × 11 1/2 in. One sample step from the plan; the full plan has the drawings, cut list, shopping list and every step.

Step 16. Screw the front boards to the front posts

Step 16. Screw the front boards to the front posts
Cedar Pot Sleeve, 24 in × 12 in × 11 1/2 in

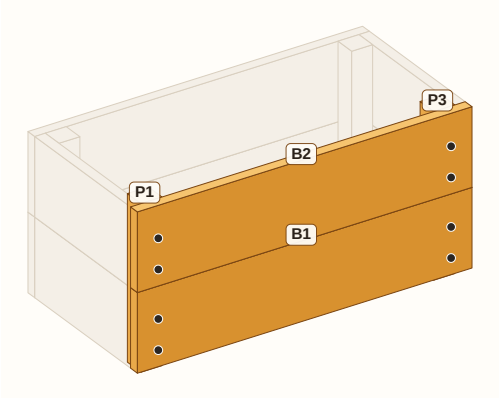

1. Lay the front posts P1 and P3 on the bench, side by side, BOTTOM ends toward you.
2. Lay B1 and B2 on them, outside face up, B1 at the bottom.
3. Set each post 3/4 in back from the board ends: use an offcut of board as a spacer.
4. Line up the bottom edge of B1 with the lines on the posts.
5. Clamp the boards to the posts.
6. Drill the 5/64 in pilot through each hole into the post until the tape touches.
7. Drive a #8 × 2 in stainless flat-head screw in each hole until its head is flush. Never hammer it.
8. Drill access: you drill straight down from the outside face; nothing is in the drill's way.

Check: The boards are tight together, the posts are square to them, every head is flush and no point shows on the other side.

> **Dimensions and assembly sequence checked in the model. This version has not been physically built.**